Engineering Sunlight Readable Displays to Prevent Sun Washout

RisingStar Engineering Team - Jul 13, 2026

A gas pump display, a drive-thru menu board, or a marine navigation panel has no workaround when the sun hits it. The display either works in sunlight — or it doesn't. A sunlight readable display is engineered from the backlight to the cover glass to stay legible when standard monitors wash out.



? Quick Answers — Sunlight Readable Displays

What is a sunlight readable display?
A sunlight readable display is an LCD engineered to remain visible in high ambient light, typically 1,000 nits or brighter, compared to 250–350 nits on a standard indoor monitor. The extra brightness overcomes ambient light washing out the screen.

What's the difference between LCD and LED?
An LCD uses a liquid crystal panel with a backlight behind it. An LED display is made of individual light-emitting diodes where each pixel is its own light source. Most "LED displays" sold in stores are actually LED-backlit LCDs.

How do you make an LCD visible in direct sunlight?
Three things: high-brightness backlights (1,000–5,000 nits), optical bonding to eliminate internal reflections, and AR/AG coated cover glass to cut surface glare.

Does high brightness shorten the display's lifespan?

It can if you don't manage heat. Passive cooling (aluminum chassis), local dimming, and ambient light auto-dimming together extend the practical lifespan to 50,000+ hours.

---

1. What Is a Sunlight Readable Display?

A sunlight readable display is engineered to remain clearly visible in bright outdoor environments. Three problems occur simultaneously when sunlight hits a standard display:

1. Ambient light overpowers the backlight. A typical indoor LCD outputs 250–400 nits. Direct sunlight delivers up to 100,000 lux. The reflected light drowns out the backlight.

2. Surface reflections create a mirror effect. Untreated glass reflects about 8% of incoming light. Under the sun, the screen becomes a mirror.

3. Internal reflections kill contrast. The air gap between the LCD panel and cover glass creates two additional reflective surfaces. Blacks become gray, colors wash out, contrast collapses.

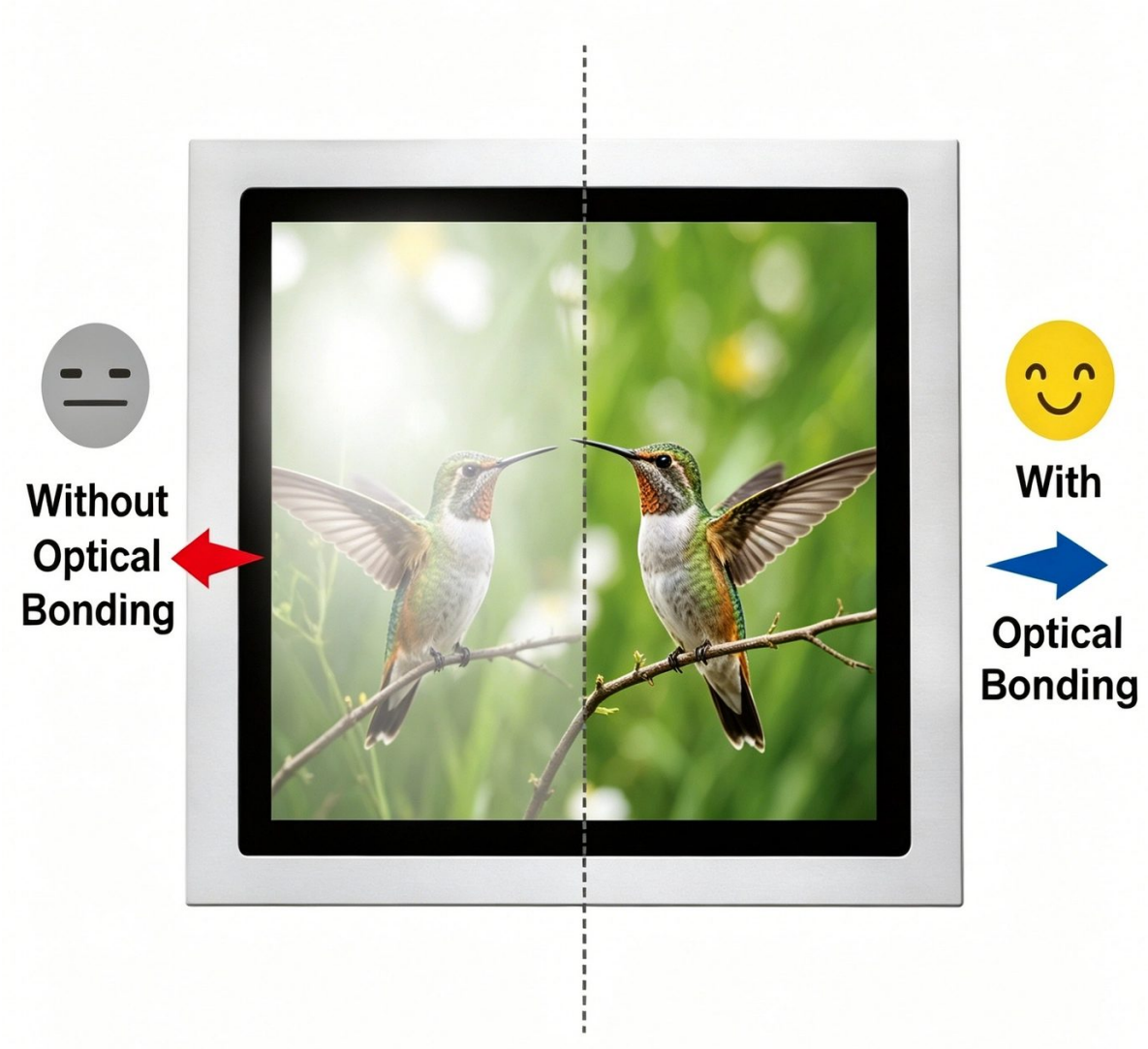

A sunlight readable display solves all three through a combination of engineering strategies, starting with high brightness.

Understanding Nits

Brightness is measured in nits (cd/m²). One nit equals roughly the brightness of a single candle per square meter.

Environment	Ambient Light	Recommended Display Brightness
Indoor office	300–500 lux	200–400 nits
Indoor near window	500–2,000 lux	400–700 nits
Shaded outdoor	2,000–10,000 lux	700–1,200 nits
Direct sunlight	10,000–100,000 lux	1,200–2,500+ nits

The industry threshold for "sunlight readable" is 1,000 nits. Comfortable readability in direct sun typically requires 1,500–2,500 nits combined with anti-reflective treatment and optical bonding.

---

2. LCD vs. LED: Clearing Up the Confusion

When a product is labeled "LED display" or "LED monitor," it is almost always still an LCD. The "LED" refers to the backlight, not the display technology itself.

How an LCD Works

An LCD panel manipulates light rather than producing it. A backlight sits behind the panel and emits white light. The liquid crystal layer twists or untwists in response to electrical signals, controlling how much light passes through. The LCD panel is a light valve, not a light source.

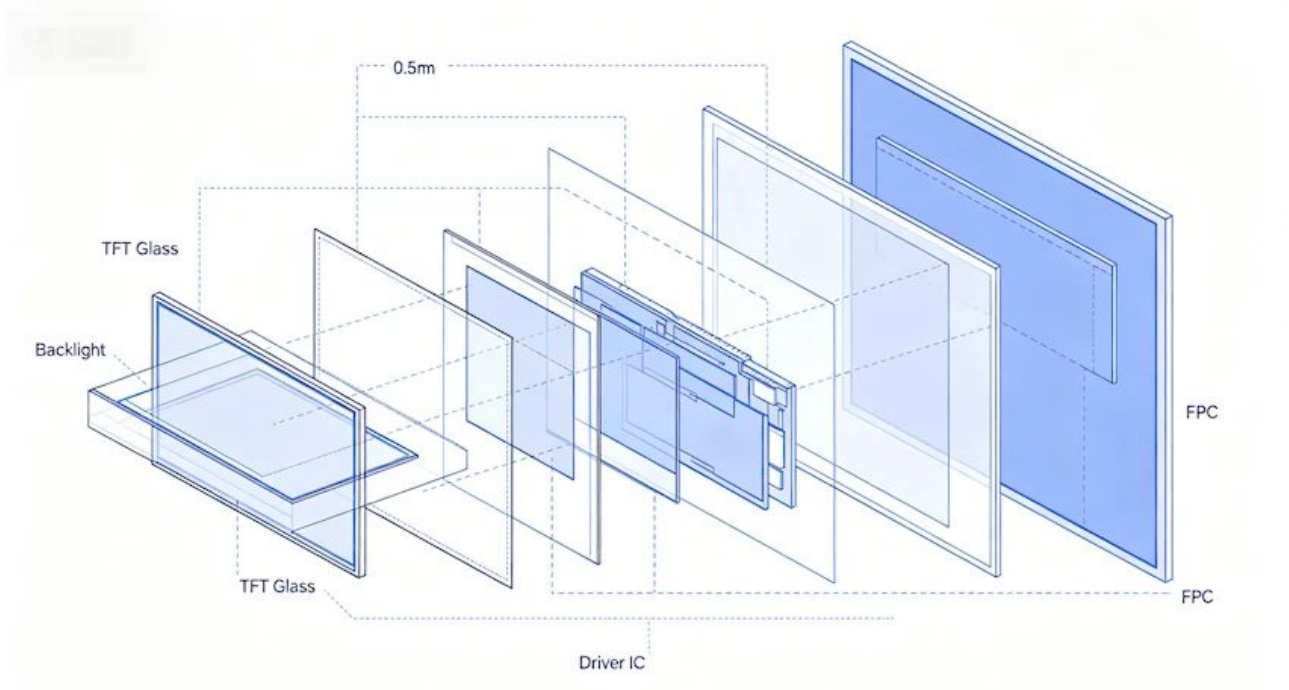

Where LED Comes In

Before 2009, LCD backlights used CCFL (Cold Cathode Fluorescent Lamp). Manufacturers then replaced CCFL with LED backlights — smaller, more energy-efficient, with better brightness control. Marketing teams labeled these "LED TVs" and "LED monitors," creating the misconception that they were a new display technology.

True LED Displays

A true LED display — where each LED is itself a pixel — exists for stadium screens, concert backdrops, and large advertising billboards. These are properly called direct-view LED displays or LED video walls.

For sunlight readable applications in the 10–55 inch range — gas stations, kiosks, marine navigation, drive-thru menus — LED-backlit LCD is the dominant technology. The LCD layer provides the high resolution needed for close-range viewing, and the LED backlight provides the brightness to overcome sunlight.

RisingStar's TFT LCD display lineup falls into this category: LCD panels with high-brightness LED backlights, engineered for outdoor visibility.

---

3. How RisingStar Makes LCD Displays Visible in Direct Sunlight

RisingStar uses a multi-layer engineering approach that addresses each point where sunlight degrades visibility.

Strategy 1: High-Brightness LED Backlight

RisingStar designs custom LED backlight arrays from 1,000 to 5,000 nits depending on the application:

- 1,000 nits: Shaded outdoor and semi-outdoor environments (covered bus stops, gas station canopies)
- 1,500–2,500 nits: Direct sunlight applications (exposed drive-thru, outdoor kiosk)
- 2,500–5,000 nits: Extreme environments (large-format outdoor signage, desert installations)



Strategy 2: AR and AG Coatings

Untreated cover glass reflects roughly 8% of incoming light. RisingStar applies AR (Anti-Reflective) coating to reduce surface reflection from ~8% to below 1%. AG (Anti-Glare) treatment scatters incoming light, softening the mirror effect and improving readability from wider angles.

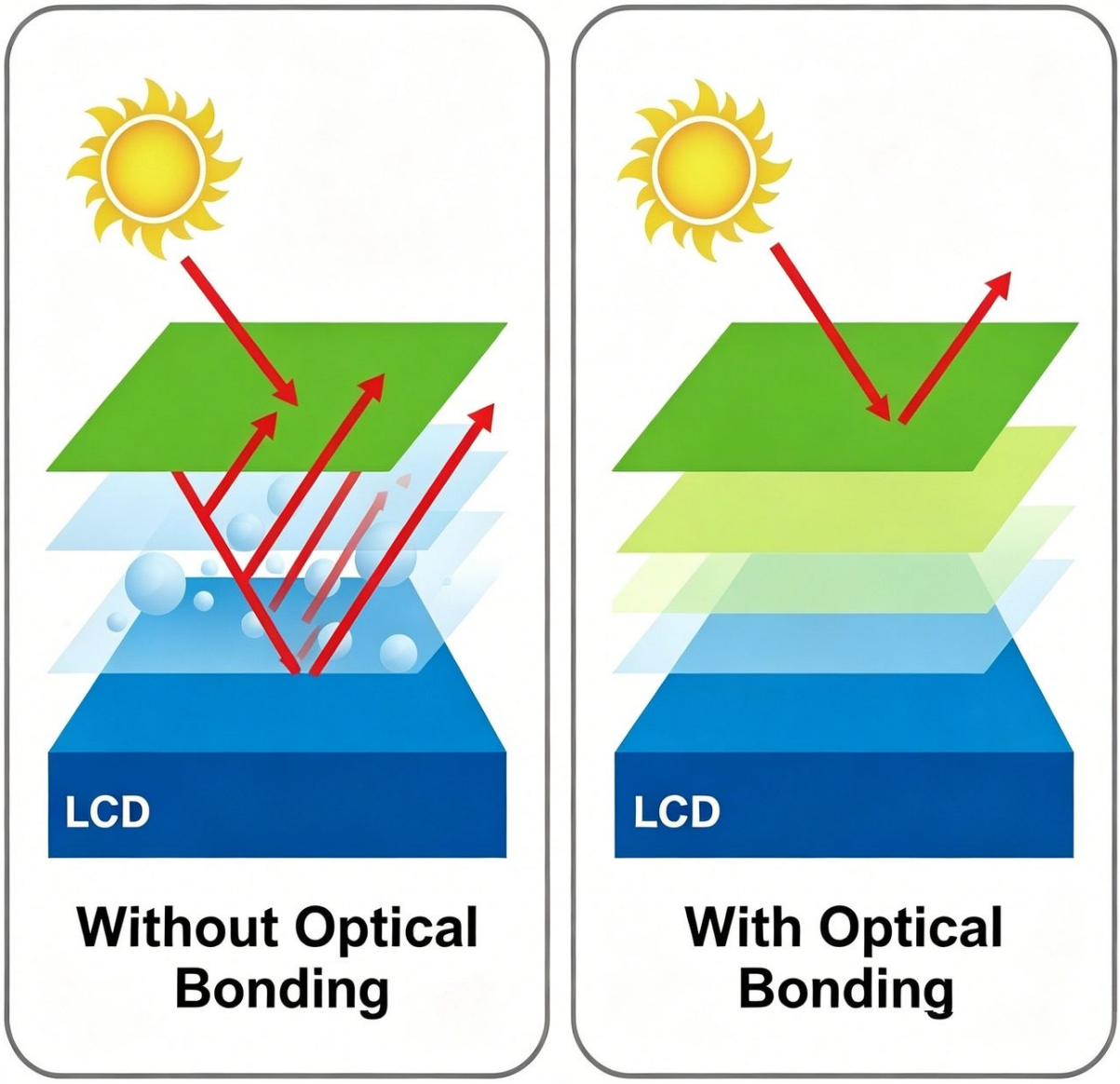

Strategy 3: Optical Bonding

The air gap between the LCD panel and cover glass creates two reflective interfaces — glass/air and air/LCD — each reflecting about 4% of light. Optical bonding fills this air gap with optically clear adhesive (OCA or OCR). By eliminating the air gap:

- Internal reflections are eliminated, improving contrast ratio by 50% or more

- No condensation or fogging between glass and panel
- Physical rigidity increases — the bonded structure resists shock and vibration better
- Touch responsiveness improves (no parallax error from the air gap)

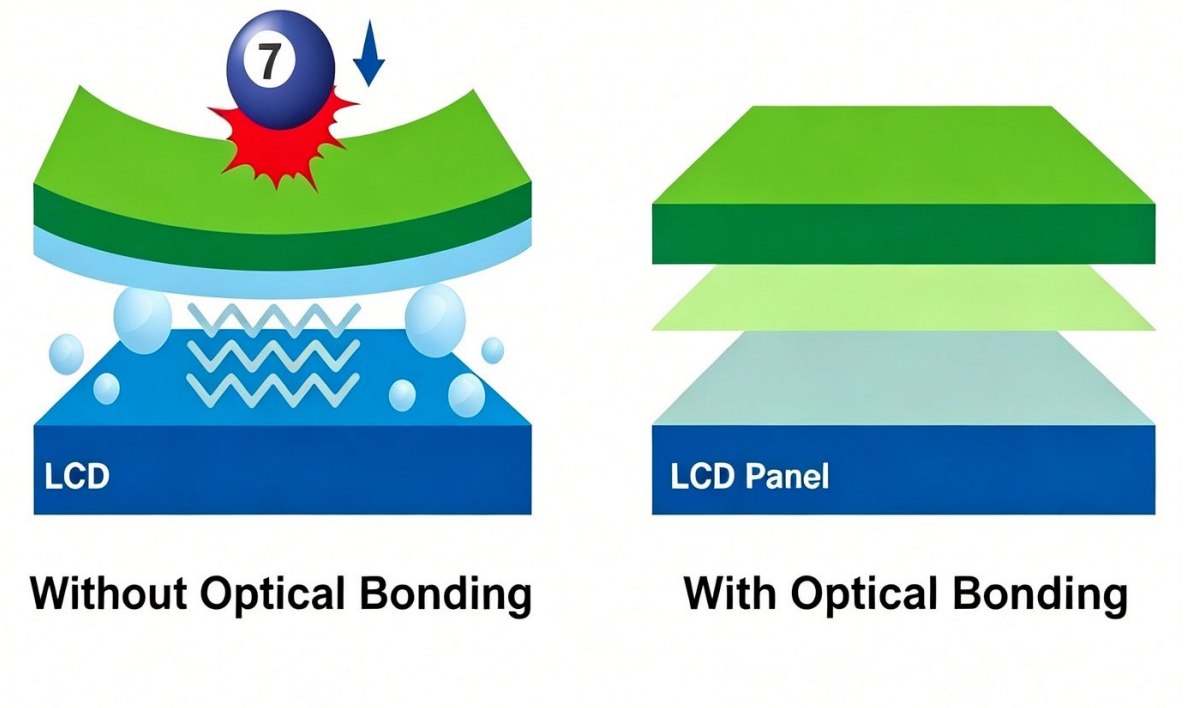

RisingStar applies optical bonding as standard on its outdoor display products, combined with AR/AG treated cover glass.

---

4. The Heat and Lifespan Problem — And How RisingStar Solves It

High brightness creates heat. A high-brightness LED backlight might consume 50W of input power, but only about 15W becomes visible light. The remaining 35W becomes waste heat inside a sealed enclosure that is already heating up under the outdoor sun.

RisingStar's Thermal Management

RisingStar uses the industry-standard passive cooling architecture — the dominant approach for outdoor displays up to 2,500 nits. The aluminum alloy chassis functions as a heat sink, drawing thermal energy from the LED backlights and radiating it to the ambient air. No fans, no moving parts.

For higher brightness levels (2,500–5,000 nits), the enclosure design provides additional ventilation or active cooling.

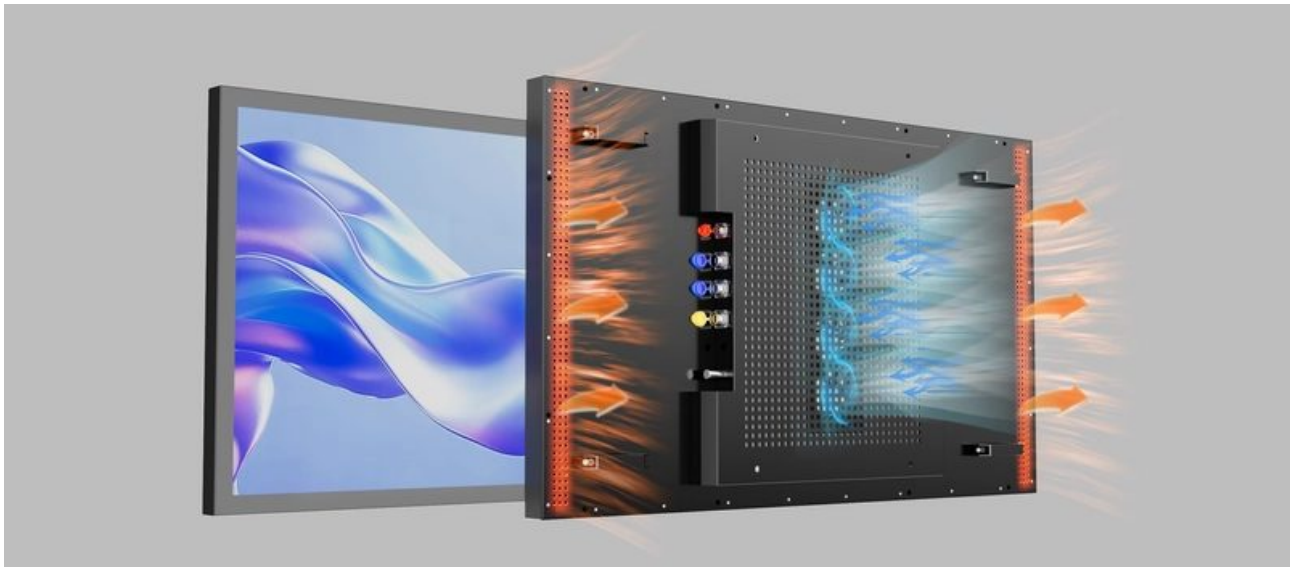

Lifespan Solution: Local Dimming + Auto-Dimming

Local dimming divides the LED backlight into independently controlled zones. Dark areas of the image get dimmed or shut off entirely. This reduces power consumption, lowers thermal stress on the LEDs, and improves contrast.

Ambient light auto-dimming uses an integrated sensor to measure the lighting environment. At noon under full sun, the display runs at maximum brightness. At dusk, it dims. At night, it drops to indoor-level brightness. The display only runs at full power when it actually needs to.

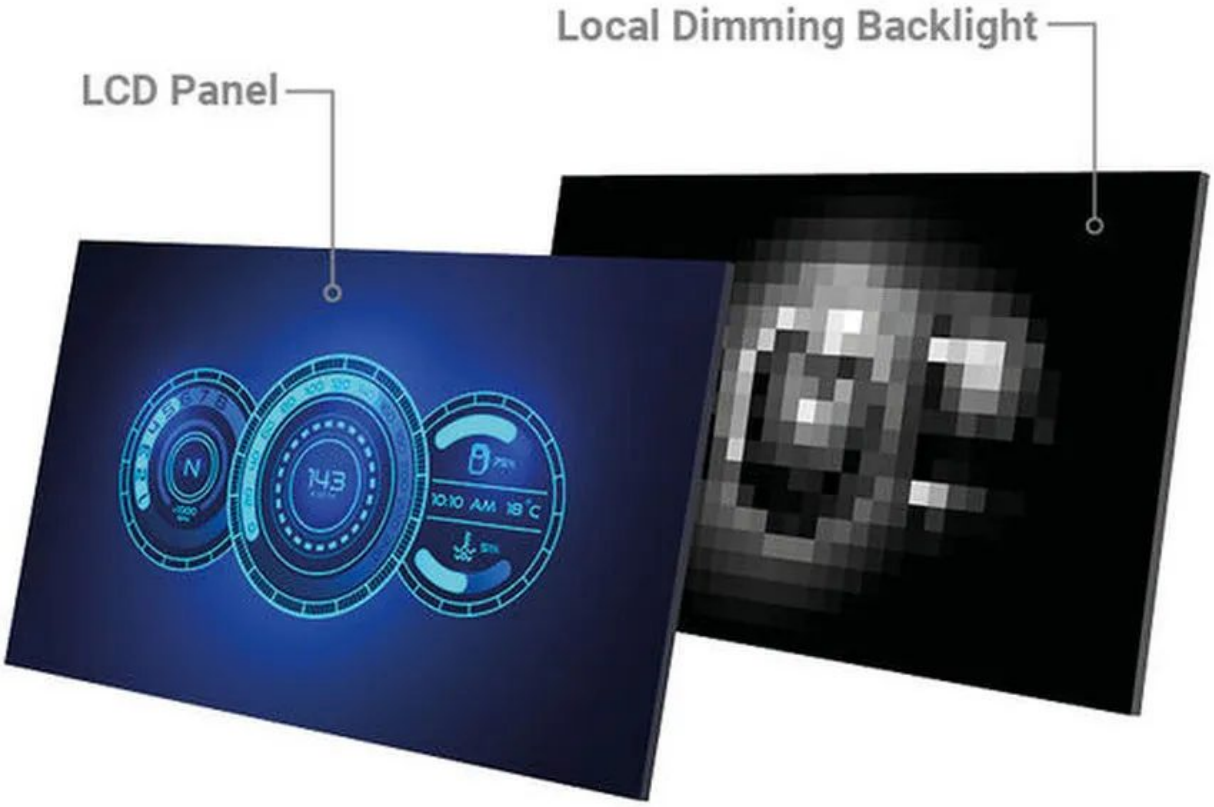

Together, local dimming and auto-dimming extend effective backlight lifespan by 30–50% compared to fixed-maximum-brightness operation.

5. Surviving the Outdoor Environment

Waterproof Protection: IP65/IP66

RisingStar's outdoor displays use IP65 or IP66 rated front sealing with EPDM gaskets. IP65 protects against dust ingress and water jets from any direction. IP66 protects against powerful water jets for coastal or monsoon-prone locations. The seal between the display and the enclosure is the most common failure point — EPDM gaskets rated for continuous outdoor exposure provide reliable long-term sealing.

Impact Protection: IK10 Glass

RisingStar uses IK10-rated tempered glass as the cover lens. IK10 is the highest impact protection rating in the IK standard (IEC 62262), certifying the glass to withstand a 5 kg steel ball dropped from 400mm. For public-facing kiosks, gas pump displays, and transit information screens, IK10 is standard.



Solar Heat: Hi-Tni Panel Technology

Standard LCD panels use liquid crystal with a clearing point of 70–80°C. When direct sun heats the panel past that temperature, the screen goes permanently black. RisingStar uses Hi-Tni (High-Temperature Nematic) liquid crystal with a clearing point of 110°C or higher, providing a safety margin above the maximum operating temperature of 70°C.



Temperature Range

RisingStar's outdoor displays are rated for operation from –20°C to +70°C, covering cold winter starts and the internal heat buildup inside a sun-exposed enclosure during summer.

RisingStar Sunlight Readable Display Solutions

No single protection layer makes a display outdoor-ready. It is the complete stack — high brightness, thermal management, sealed enclosure, impact-resistant glass, and Hi-Tni panel technology — that determines whether a display survives 3 months or 3 years outdoors. RisingStar's sunlight readable display solutions are engineered as integrated systems.

Browse RisingStar's TFT LCD display products to find the right configuration for your environment.

? ai@risinglcd.com · ? +86 158 8946 9208 · ? www.risinglcd.com